ARTISTE™ MONDRIAN

The **Artiste Mondrian™** is an extremely bright, full-featured LED profile FX fixture offering high center intensity, narrow-beam angles and a wide color-mixing gamut through its variable SpectraColor engine. Providing up to 51,000 lumens from its efficient 950W 6,500K LED engine, the Mondrian is the ideal fixture for any application requiring superior output, bright and powerful narrow beams, and quiet operation, as well as stunning effects and colors. Mondrian integrates Elation's new SpectraColor system, which offers traditional CMY mixing but adds a variable RGB color mix for rich, saturated primaries. In combination with the variable CTO, the Mondrian allows for colors that were previously impossible to achieve, from theatrical pastels to the most vibrant red or blues ever produced by a color mixing system. The Artiste Mondrian's wide color gamut is achieved by seven color-mixing flags with 16-bit precision for artistic possibilities that are truly inspiring. The fixed color wheel offers UV and high CRI options to round out the amazing color range of the fixture. The full-blackout framing array includes Elation's newly designed, unlimited indexing and continuous rotation control. Shapes can rotate like gobos while morphing and transforming, allowing for new creative transitions and interesting projection and aerial effects not previously possible. Mondrian also offers a comprehensive FX package with 12 rotating interchangeable glass gobos, full animation wheel, dual prisms, dual frost and a high-speed iris. With a narrow beam zoom from 3° to 45° and a very large 226mm (8 3/4") front lens, the Mondrian has the power to cut through at even great distances in arena touring environments or any large-scale show setting. The Artiste Mondrian ships in a cardboard box with a custom-fitted polyurethane foam FIL (Foam In Lay) insert. The foam insert easily fits into a custom flight case (not included) and provides enhanced impact protection during transport.

FEATURE

High Efficiency 950W 6,500K White Peak Field LED Engine
Up to 51,000 Total Lumen Fixture Output
Peak Field engine for powerful beams and high center intensity
SpectraColor CMYRGB Array and Variable Linear CTO
6-Position Color Wheel, High CRI, UV Filter
Complete FX System: 2x Rotating Gobo Wheels, Animation, Iris, Dual Prism, Dual Frost
Full Blackout Framing System with 360° Continuous Index and Rotation of Shapes
Narrow Beams to Wide Washes from 3° to 45°
Large 226mm (8 3/4") Clear Plano Convex (PC) Lens

Specifications are subject to change without notice ©Elation Professional 05/13/2022

Elation Professional USA | 6122 S. Eastern Ave. | Los Angeles, CA. 90040
323-582-3322 | 323-832-9142 fax | www.elationlighting.com | info@elationlighting.com

Elation Professional B.V. | Junostraat 2 | 6468 EW Kerkrade, The Netherlands
+31 45 546 85 66 | +31 45 546 85 96 fax | www.elationlighting.eu | info@elationlighting.eu

SPECIFICATIONS

SOURCE
950W 6,500K Bright White LED Engine
30,000 Hour Average LED Life*

*Test lab conditions. May vary depending on several factors including but not limited to: Environmental Conditions, Power/Voltage, Usage Patterns (On-Off Cycling), Control, and Dimming.

PHOTOMETRIC DATA
51,000 Total Lumen Fixture Output
CRI 72+ (84+ with HCRI Filter)
Zoom Range 3° - 45°
Beam Angle 2.8° - 34.9°
Field Angle 4° - 46.1°

EFFECTS
Motorized Zoom (226mm / 8 3/4" front lens)
4 Rotating Full Blackout Framing Blades
360° Continuous Framing Index and Rotation
Full 360° Bi-Directional Animation Wheel
2 Rotating Prisms
2 Variable Frost Filters (Light and Wash)
Internal Color, Framing, Prism, and Frost Macros
Motorized Iris with Variable Pulse Effects
Variable 16-bit Dimming Curve Modes
High Speed Electronic Shutter and Strobe
DMX Controllable LED Refresh Rate

COLOR
SpectraColor CMY + RGB Color Mixing Array
6 Dichroic Colors including High CRI Filter and UV
Linear CTO Color Correction

GOBOS
2 Gobo Wheels
12 Rotating / Indexing Interchangeable Glass Gobos

CONTROL / CONNECTIONS
2 DMX Channel Modes (42/ 68)
16-bit Pan, Tilt and Dimming Control
Motorized Focus and Auto-Focus Presets
DMX, RDM, Art-NET, sACN Protocol Support
(6) Button Touch Control Panel
Full Color 180° Reversible LCD Menu Display
Hibernation Mode (Power Save)
Locking 5pin XLR DMX, RJ45 Ethernet, and Pow
USB Connection (Firmware Updates)
With Wired Digital Communication Network

SIZE / WEIGHT
Length: 18.55 in. (472mm)
Width: 26.5 in. (673mm)
Height: 34.2 in. (870mm)
Weight: 104.7 lbs. (47.5kg)

ELECTRICAL / THERMAL
AC 120-240V 50/60Hz
Max Power Consumption 1,500W
BTU/hr (+/- 10%) 5115

APPROVALS / RATINGS
CE | cETLus | IP20

COLOR FLAGS

COLOR WHEEL

ROTATING GOBO WHEEL 1
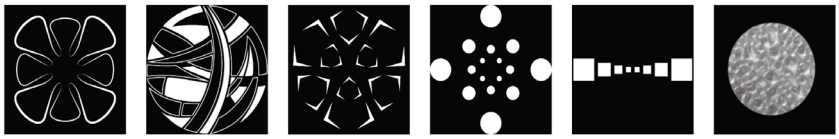

ROTATING GOBO WHEEL 2

ANIMATION WHEEL
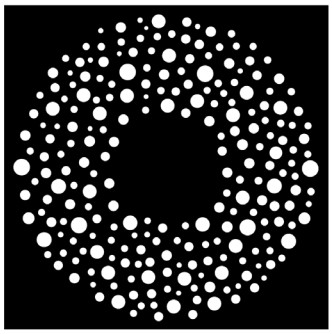

DIMENSIONS
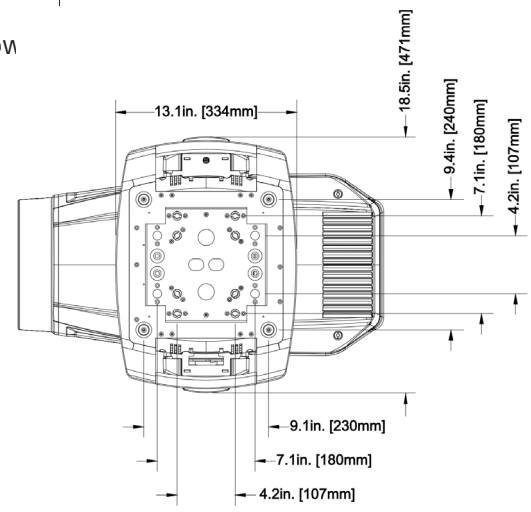

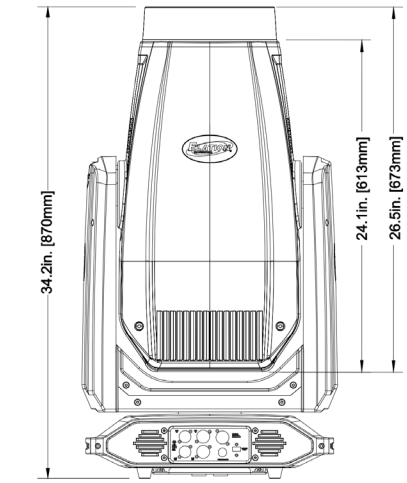

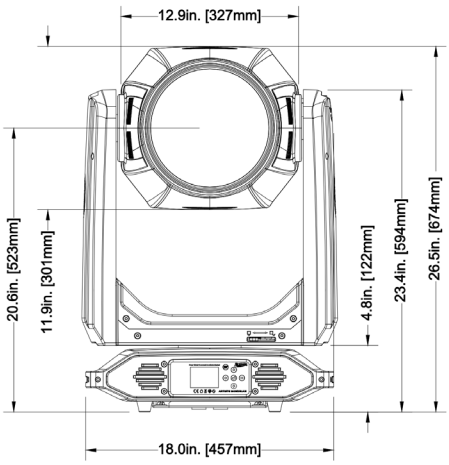

*Drawings not to scale

ORDERING INFORMATION

EAM297	ArtisteMondrian™
DRCPRO001	Dual Pro Road Case Artiste Rembrandt, Artiste Monet, Proteus Maximus, and Artiste Mondrian

Specifications are subject to change without notice ©Elation Professional 05/13/2022

Elation Professional USA | 6122 S. Eastern Ave. | Los Angeles, CA. 90040
323-582-3322 | 323-832-9142 fax | www.elationlighting.com | info@elationlighting.com

Elation Professional B.V. | Junostraat 2 | 6468 EW Kerkrade, The Netherlands
+31 45 546 85 66 | +31 45 546 85 96 fax | www.elationlighting.eu | info@elationlighting.eu

FOAM IN LAY DIMENSIONAL DRAWINGS

The **Artiste Mondrian™** fixture ships with a custom fitted polyurethane foam FIL (Foam In Lay) packaging insert, which easily fits into a custom sized flight case (not included), and provides enhanced impact protection during transport.

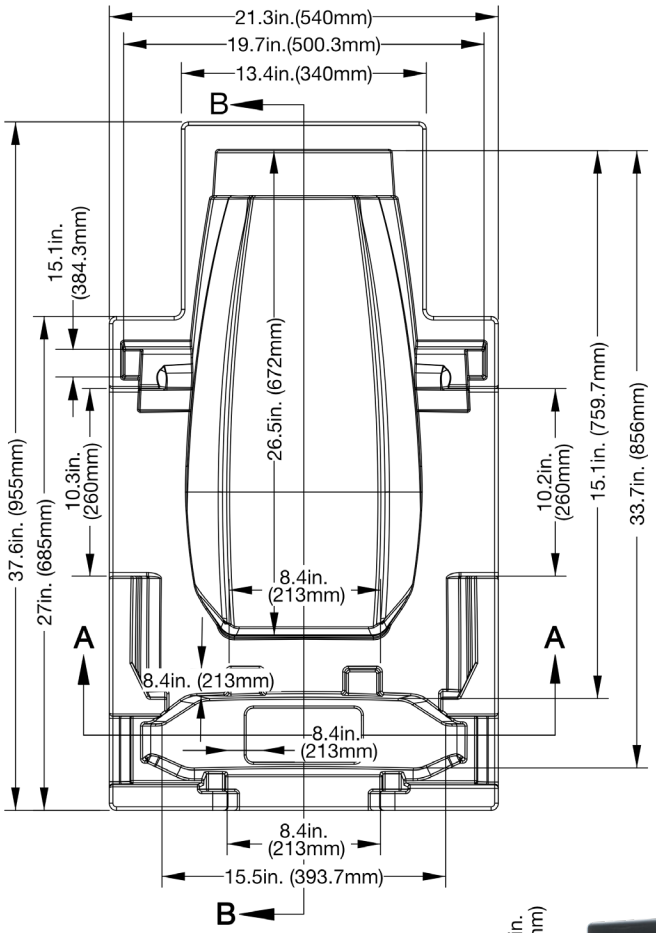

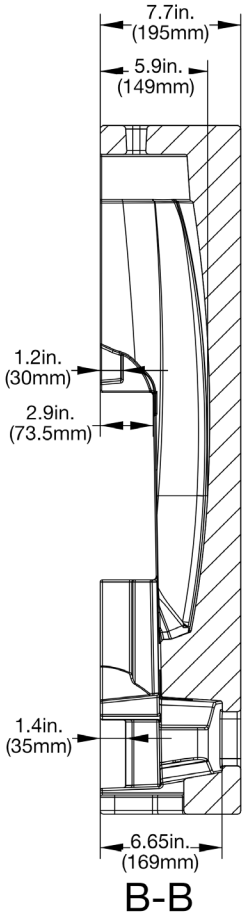

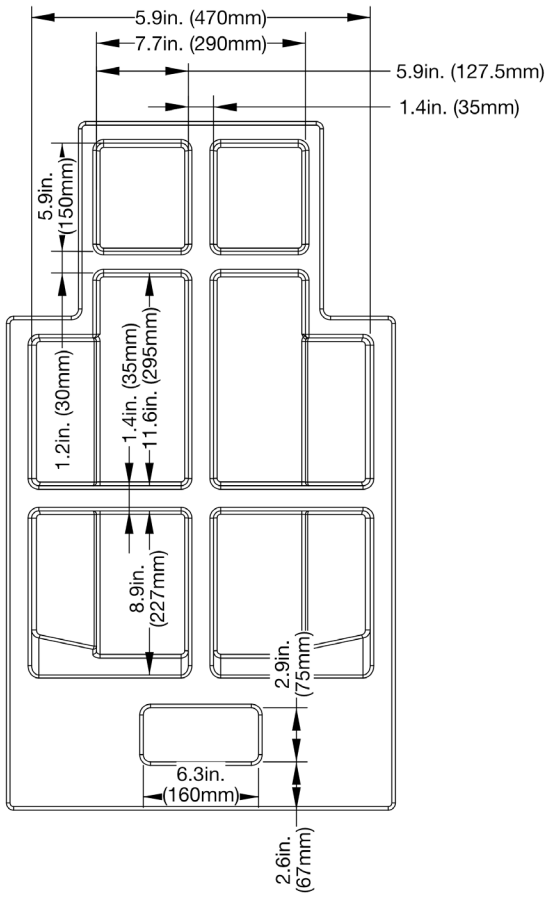

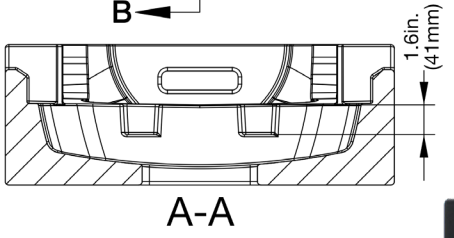

DRAWING NOT TO SCALE

©ELATION PROFESSIONAL all rights reserved.
Information contained within this drawing is proprietary and confidential.
Any reproduction and/or distribution of any part of this drawing without the written consent by Elation Professional is strictly prohibited. Diagrams and/or measurements herein subject to change without notice.

Elation Professional USA | 6122 S. Eastern Ave. | Los Angeles, CA. 90040
323-582-3322 | 323-832-9142 fax | www.elationlighting.com | info@elationlighting.com

Elation Professional B.V. | Junostraat 2 | 6468 EW Kerkrade, The Netherlands
+31 45 546 85 66 | +31 45 546 85 96 fax | www.elationlighting.eu | info@elationlighting.eu