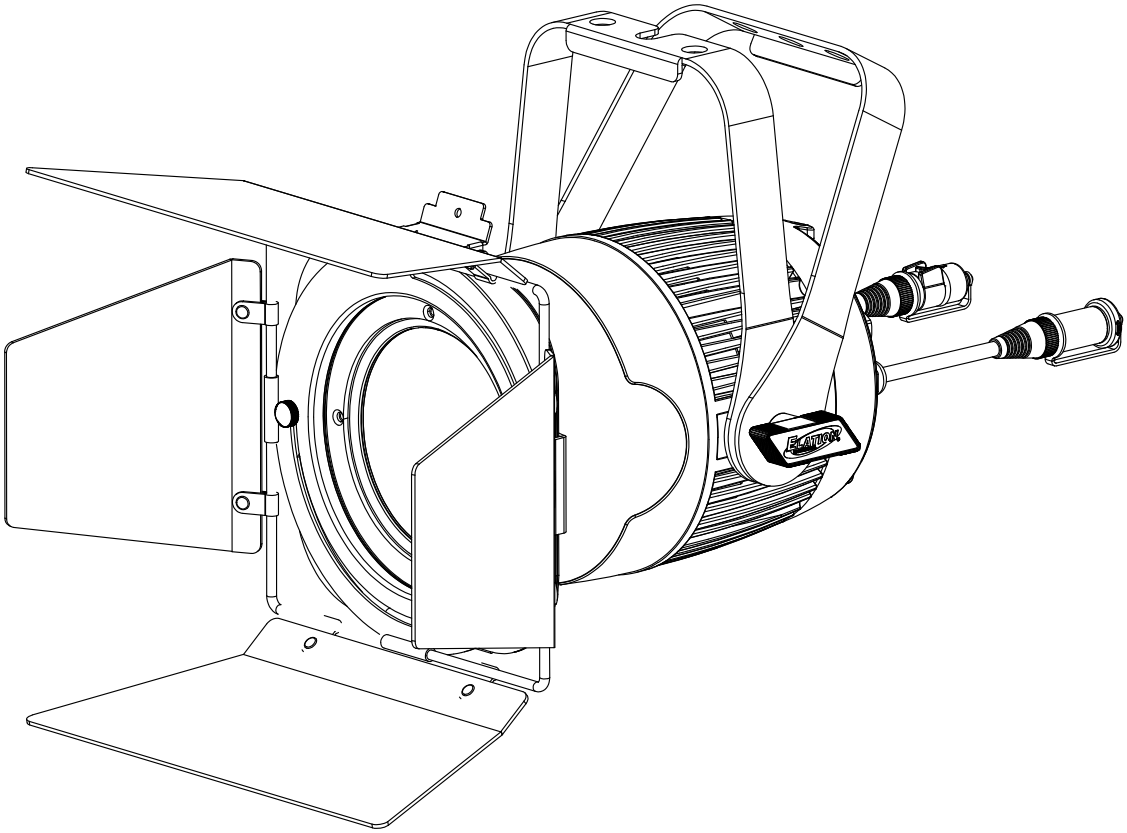

FUZE PAR Z60 IP™

user manual

ELATION | FUZE PAR Z60 IP™ | user manual

©2016 ELATION PROFESSIONAL all rights reserved. Information, specifications, diagrams, images, and instructions herein are subject to change without notice. ELATION PROFESSIONAL logo and identifying product names and numbers herein are trademarks of ELATION PROFESSIONAL. Copyright protection claimed includes all forms and matters of copyrightable materials and information now allowed by statutory or judicial law or hereinafter granted. Product names used in this document may be trademarks or registered trademarks of their respective companies and are hereby acknowledged. All non-ELATION brands and product names are trademarks or registered trademarks of their respective companies.

ELATION PROFESSIONAL and all affiliated companies hereby disclaim any and all liabilities for property, equipment, building, and electrical damages, injuries to any persons, and direct or indirect economic loss associated with the use or reliance of any information contained within this document, and/or as a result of the improper, unsafe, insufficient and negligent assembly, installation, rigging, and operation of this product.

Elation Professional USA | 6122 S. Eastern Ave. | Los Angeles, CA. 90040

323-582-3322 | 323-832-9142 fax | www.elationlighting.com | info@elationlighting.com

Elation Professional B.V. | Junostraat 2 | 6468 EW Kerkrade, The Netherlands

+31 45 546 85 66 | +31 45 546 85 96 fax | www.elationlighting.eu | info@elationlighting.eu

D O C U M E N T V E R S I O N

Due to additional product features and/or enhancements, an updated version of this document may be available online.
Please check Elation Service for the latest revision/update of this manual, before beginning installation and/or programming.

Date	Document Version	Software Version ≥	DMX Channel Modes	Notes
08/23/16	1.2	IU 1.02 2U 1.02	CH:04 RGBW / CH:04 HSI / CH:05 HSI+ CH:06 RGBW / CH:07 sRGBWI CH:07 RGBW / CH:08 RGBW CH:09 RGBW / CH:10 16Bit / CH:10 HSI CH12: sRGBWI / CH:13 RGBW	Added Gel Frame and Barn Doors installation diagram and dimensional drawings.
11/22/16	1.2	N/C	NO CHANGE	Updated Gel Frame / Barn Door installation diagram.
12/9/16	1.3	N/C	NO CHANGE	Added LCD Control Panel Lockout feature steps.
04/06/17	1.4	N/C	NO CHANGE	Updated Strobe DMX Values.
05/25/17	1.5	N/C	NO CHANGE	Added ETL control #.
02/14/18	1.6	N/C	NO CHANGE	Updated format, added 4CH RGBW Zoom function note.

CONTENTS

General Information	4
Warranty	7
Safety Instructions and Guidelines	8
Overview	10
Gel Frame & Barn Door Installation	11
Installation	12
System Menu	15
DMX Channel Functions And Values	19
Cleaning and Maintenance	23
Technical Specifications	24
Optional Accessories	26

GENERAL INFORMATION

INTRODUCTION

This fixture has been designed to perform reliably for years when the guidelines in this booklet are followed. Please read and understand the instructions in this manual carefully and thoroughly before attempting to operate this unit. These instructions contain important information regarding safety during use and maintenance.

IP65 RATED

An IP rated lighting fixture is one, which is commonly installed in outdoor environments and has been designed with an enclosure that effectively protects the ingress (entry) of external foreign objects such as dust and water. The **International Protection (IP)** rating system is commonly expressed as **"IP"** (Ingress Protection) followed by two numbers (i.e. IP65) where the numbers define the degree of protection. The first digit (Foreign Bodies Protection) indicates the extent of protection against particles entering the fixture and the second digit (Water Protection) indicates the extent of protection against water entering the fixture. An IP65 rated lighting fixture is one, which has been designed and tested to protect against the ingress of dust (6) and low-pressure water jets from any direction (5).

MARINE/COASTAL ENVIRONMENT INSTALLATIONS!

Please note although this fixture is IP rated, the fixture is NOT suitable for marine and/or coastal environment installations. Installing this fixture in a marine and/or coastal environment may cause corrosion and/or excessive wear to the interior and/or exterior components of the fixture. Damages and/or performance issues resulting from installation in a marine and/or coastal environment will void the manufactures warranty and will NOT be subject to any warranty claims and/or repairs.

ENSURE ALL CONNECTIONS AND END CAPS ARE PROPERLY SEALED WITH A NON-CONDUCTIVE DIELECTRIC GREASE (AVAILABLE AT MOST ELECTRICAL SUPPLIERS) TO PREVENT WATER INGRESS/CONDENSATION AND/OR CORROSION.

OPTIONAL CORROSION-RESISTANT COATING

Optional Corrosion-Resistant Coatings may be available for this fixture.
Please consult your **Elation Professional** sales representative for details.

UNPACKING

Every fixture has been thoroughly tested and has been shipped in perfect operating condition. Carefully check the shipping carton for damage that may have occurred during shipping. If the carton appears to be damaged, carefully inspect your unit for damage and be sure all accessories necessary to operate the unit have arrived intact. In the event damage has been found or parts are missing, please contact our customer support team for further instructions. Please do not return this unit to your dealer without first contacting customer support at the number listed below. Please do not discard the shipping carton in the trash. Please recycle whenever possible.

BOX CONTENTS

(1) Gel Frame
(1) Gel Frame/Barn Door Holder (x4 Phillips mounting screws)
(1) Barn Door (x2 Thumb mounting screws)
(1) power Cable

CUSTOMER SUPPORT

Elation Professional® provides a customer support line, to provide set up help and to answer any question should you encounter problems during your set up or initial operation. You may also visit us on the web at www.elationlighting.com for any comments or suggestions. For service related issue please contact Elation Professional®.

ELATION SERVICE USA - Monday - Friday 8:00am to 5:00pm PST
Voice: 323-582-3322 **Fax: 323-832-9142**
E-mail: support@elationlighting.com

ELATION SERVICE EUROPE - Monday - Friday 08:30 to 17:00 CET
Voice: +31 45 546 85 30 **Fax: +31 45 546 85 96**
E-mail: support@elationlighting.eu

WARRANTY REGISTRATION

Please complete and mail in the enclosed warranty card or register online: http://www.elationlighting.com/Login.aspx to validate your purchase. All returned service items whether under warranty or not, must be freight pre-paid and accompany a return authorization (R.A.) number. The R.A. number must be clearly written on the outside of the return package. A brief description of the problem as well as the R.A. number must also be written down on a piece of paper and included in the shipping container. If the unit is under warranty, you must provide a copy of your proof of purchase invoice. Items returned without a R.A. number clearly marked on the outside of the package will be refused and returned at customer's expense. You may obtain a R.A. number by contacting customer support.

IMPORTANT NOTICE!

There are no user serviceable parts inside this unit. Do not attempt any repairs yourself; doing so will void your manufactures warranty. Damages resulting from modifications to this fixture and/or the disregard of safety and general user instructions found in this user manual void the manufactures warranty and are not subject to any warranty claims and/or repairs.

LIMITED WARRANTY

A. Elation Professional® hereby warrants, to the original purchaser, Elation Professional® products to be free of manufacturing defects in material and workmanship for a period of two years (730 days), and Elation Professional® product rechargeable batteries to be free of manufacturing defects in material and workmanship for a period of six months (180 days), from the original date of purchase. This warranty excludes discharge lamps and all product accessories. This warranty shall be valid only if the product is purchased within the United States of America, including possessions and territories. It is the owner's responsibility to establish the date and place of purchase by acceptable evidence, at the time service is sought.

B. For warranty service, send the product only to the Elation Professional® factory. All shipping charges must be pre-paid. If the requested repairs or service (including parts replacement) are within the terms of this warranty, Elation Professional® will pay return shipping charges only to a designated point within the United States. If any product is sent, it must be shipped in its original package and packaging material. No accessories should be shipped with the product. If any accessories are shipped with the product, Elation Professional® shall have no liability what so ever for loss and/or or damage to any such accessories, nor for the safe return thereof.

C. This warranty is void if the product serial number and/or labels are altered or removed; if the product is modified in any manner which Elation Professional® concludes, after inspection, affects the reliability of the product; if the product has been repaired or serviced by anyone other than the Elation Professional® factory unless prior written authorization was issued to purchaser by Elation Professional®; if the product is damaged because not properly maintained as set forth in the product instructions, guidelines and/or user manual.

D. This is not a service contract, and this warranty does not include any maintenance, cleaning or periodic check-up. During the periods as specified above, Elation Professional® will replace defective parts at its expense, and will absorb all expenses for warranty service and repair labor by reason of defects in material or workmanship. The sole responsibility of Elation Professional® under this warranty shall be limited to the repair of the product, or replacement thereof, including parts, at the sole discretion of Elation Professional®. All products covered by this warranty were manufactured after January 1, 1990, and bare identifying marks to that effect.

E. Elation Professional® reserves the right to make changes in design and/or performance improvements upon its products without any obligation to include these changes in any products theretofore manufactured.

F. No warranty, whether expressed or implied, is given or made with respect to any accessory supplied with the products described above. Except to the extent prohibited by applicable law, all implied warranties made by Elation Professional® in connection with this product, including warranties of merchantability or fitness, are limited in duration to the warranty periods set forth above. And no warranties, whether expressed or implied, including warranties of merchantability or fitness, shall apply to this product after said periods have expired. The consumer's and/or dealer's sole remedy shall be such repair or replacement as is expressly provided above; and under no circumstances shall Elation Professional® be liable for any loss and/or damage, direct and/or consequential, arising out of the use of, and/or the inability to use, this product.

G. This warranty is the only written warranty applicable to Elation Professional® products and supersedes all prior warranties and written descriptions of warranty terms and conditions heretofore published.

SAFETY INSTRUCTIONS AND GUIDELINES

This fixture is an extremely sophisticated piece of electronic equipment. To guarantee a smooth operation, it is important to follow all instructions and guidelines in this manual. The manufacturer of this device is not responsible for injury and/or damages resulting from the misuse of this fixture due to the disregard of the information printed in this manual. Only qualified and/or certified personnel should perform installation of this fixture and only the original rigging parts (omega brackets) included with this fixture should be used for installation. Any modifications to the fixture and/or the mounting hardware included will void the original manufactures warranty and increase the risk of damage and/or personal injury.

PROTECTION CLASS 1 - FIXTURE MUST BE PROPERLY GROUNDED

DO NOT PLUG FIXTURE INTO A DIMMER PACK!

NEVER OPEN THIS FIXTURE WHILE IN USE!

UNPLUG POWER BEFORE SERVICING FIXTURE!

NEVER TOUCH FIXTURE DURING OPERATION, AS IT MAY BE HOT!

KEEP FLAMMABLE MATERIALS AWAY FROM FIXTURE!

NEVER LOOK DIRECTLY INTO THE LIGHT SOURCE!

RETINA INJURY RISK - MAY INDUCE BLINDNESS!

SENSITIVE PERSONS MAY SUFFER AN EPILEPTIC SHOCK!

ENSURE ALL CONNECTIONS AND END CAPS ARE PROPERLY SEALED WITH A DIELECTRIC GREASE (AVAILABLE AT MOST ELECTRICAL SUPPLIERS) TO PREVENT WATER CORROSION AND/OR ELECTRICAL SHORT CIRCUIT.

SAFETY INSTRUCTIONS AND GUIDELINES

- **DO NOT TOUCH** the fixture housing during operation. Turn OFF the power and allow approximately 15 minutes for the fixture to cool down before serving.
- **DO NOT** shake fixture, avoid brute force when installing and/or operating fixture.
- **DO NOT** operate fixture if the power cord has become frayed, crimped, damaged and/or if any of the power cord connectors are damaged and do not insert into the fixture securely with ease. **NEVER** force a power cord connector into the fixture. If the power cord or any of its connectors are damaged, replace it immediately with a new one of similar power rating.
- **DO NOT** block any air ventilation slots. All fan and air inlets must remain clean and never blocked. Allow approx. 6" (15cm) between fixture and other devices or a wall for proper cooling.
- When installing fixture in a suspended environment, always use mounting hardware that is no less than M10 x 25 mm, and always install fixture with an appropriately rated safety cable.
- Always disconnect fixture from main power source before performing any type of service and/or cleaning procedure. Only handle the power cord by the plug end, never pull out the plug by tugging the wire portion of the cord.
- During the initial operation of this fixture, a light smoke or smell may emit from the interior of the fixture. This is a normal process and is caused by excess paint in the interior of the casing burning off from the heat associated with the lamp and will decrease gradually over time.
- Consistent operational breaks will ensure the fixture will function properly for many years to come.
- Use the original packaging and materials to transport the fixture in for service.

OVERVIEW

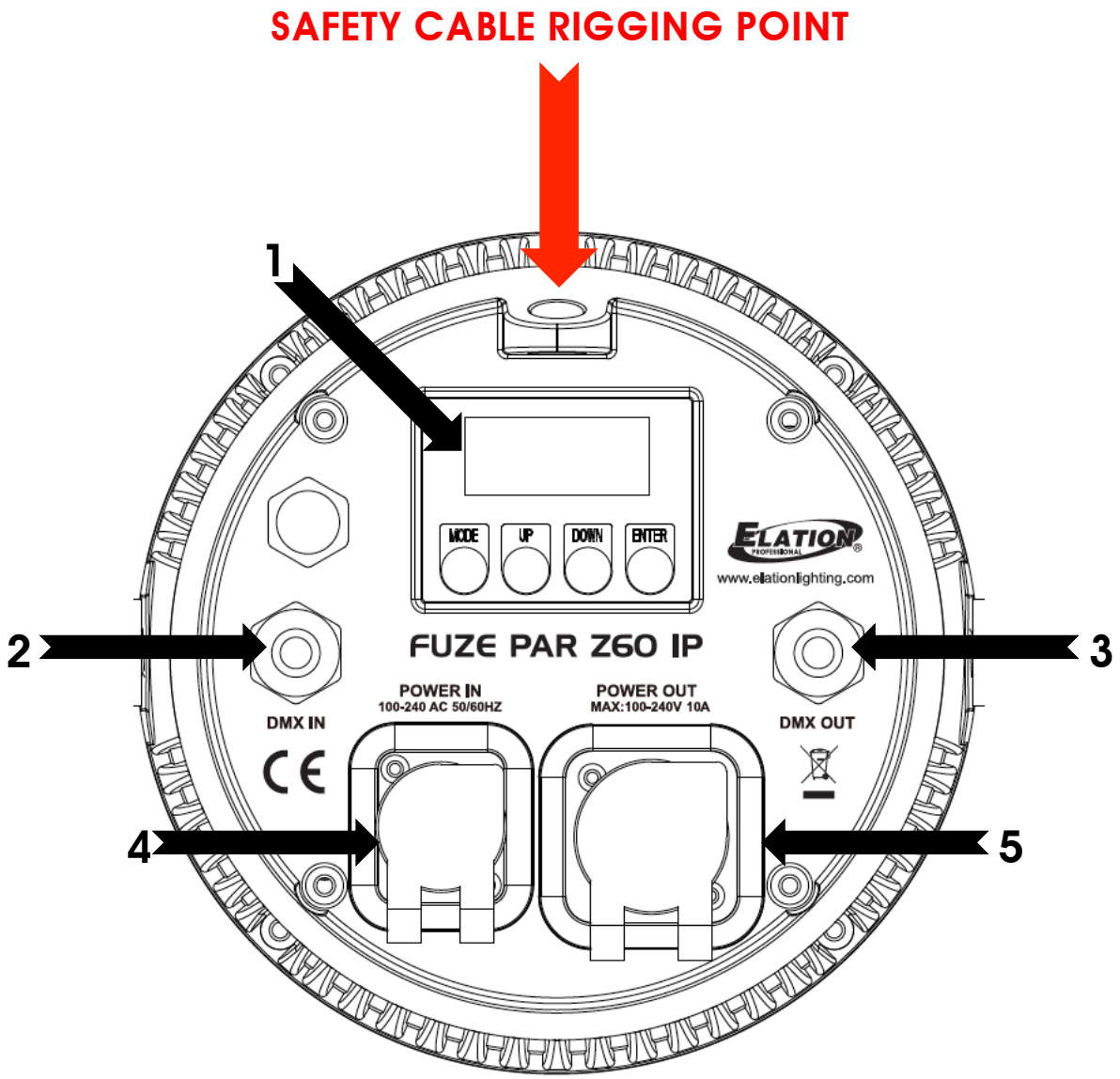

1. LCD Control Panel Menu Display
2. 5pin DMX IN Attached Cable
3. 5pin DMX Out Attached Cable
4. Power IN
5. Power OUT

GEL FRAME & BARN DOOR INSTALLATION

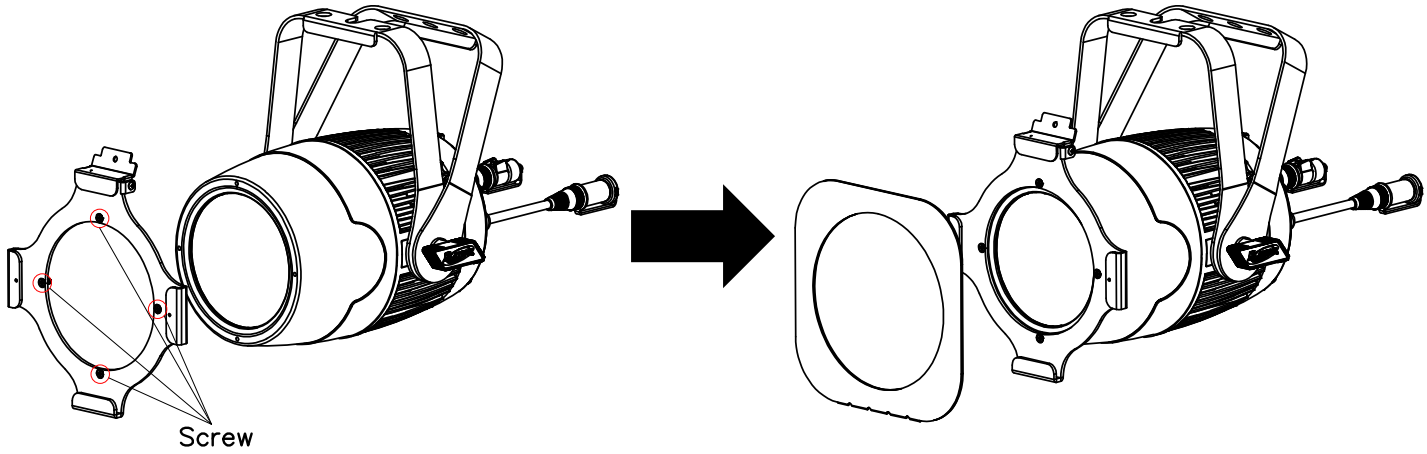

1. Remove BARN DOOR / GEL FRAME HOLDER from shipping box and separate.

2. Attach GEL FRAME HOLDER onto fixture with included (4) Phillips screws.

3. Push back retention clip and slide GEL FRAME down into GEL FRAME HOLDER.

MAKE SURE RETENTION CLIP IS SECURELY PLACED OVER GEL FRAME

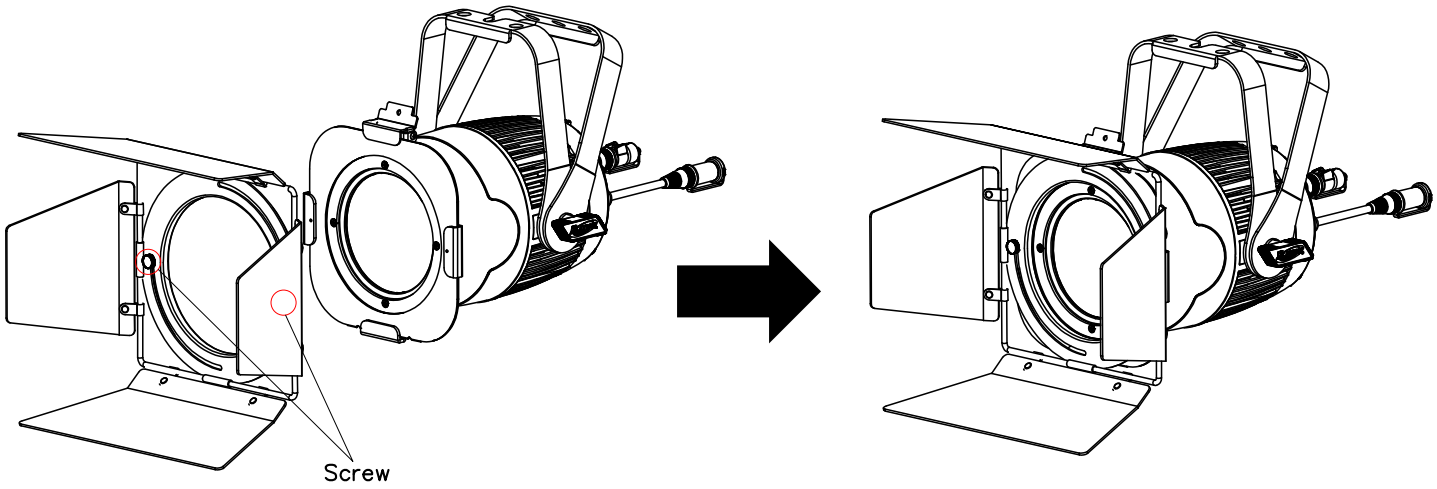

4. Push back retention clip and slide BARN DOOR down into GEL FRAME HOLDER.

5. Rotate BARN DOOR to desired position and secure with included (2) Thumb screws.

MAKE SURE RETENTION CLIP IS SECURELY PLACED OVER BARN DOOR

INSTALLATION

FLAMMABLE MATERIAL WARNING

Keep fixture at least 5.0 feet (1.5m) away from any flammable materials, decorations, pyrotechnics, etc.

ELECTRICAL CONNECTIONS

A qualified electrician should be used for all electrical connections and/or installations.

ENSURE ALL CONNECTIONS AND END CAPS ARE PROPERLY SEALED WITH A DIELECTRIC GREASE (AVAILABLE AT MOST ELECTRICAL SUPPLIERS) TO PREVENT WATER CORROSION AND/OR ELECTRICAL SHORT CIRCUIT.

DO NOT INSTALL THE FIXTURE IF YOU ARE NOT QUALIFIED TO DO SO!

Fixture MUST be installed following all local, national, and country commercial electrical and construction codes and regulations.

Before rigging/mounting the fixture to any metal truss/structure or placing the fixture on any surface, a professional equipment installer MUST be consulted to determine if the metal truss/structure or surface is properly certified to safely hold the combined weight of the fixture, clamps, cables, and accessories.

Fixture ambient operating temperature range is **5° to 113°F. (-15° to 45°C)**
Do not use the fixture under or above this temperature.

Fixture should be installed in areas outside walking paths, seating areas, or away from areas were unauthorized personnel might reach the fixture by hand.

NEVER stand directly below the fixture when rigging, removing or servicing.
Overhead fixture installation must always be secured with a secondary safety attachment, such as an appropriately rated safety cable that can hold 10 times the weight of the fixture.

Allow approximately 15 minutes for the fixture to cool down before serving.

CLAMP INSTALLATION

The fixture provides an integrated mounting dual bracket / yoke. When mounting this fixture to truss be sure to secure an appropriately rated clamp to the mounting bracket / yoke using a M10 screw fitted through the center hole. Be sure to attach an appropriate **Safety Cable** (not included) to the fixture using the safety cable rigging point integrated into the back of the fixture.

RIGGING

Overhead rigging requires extensive experience, including amongst others calculating working load limits, installation material being used, and periodic safety inspection of all installation material and the fixture. If you lack these qualifications, do not attempt the installation yourself. Improper installation can result in bodily injury. Fixture is fully operational in the specific mounting positions illustrated below.

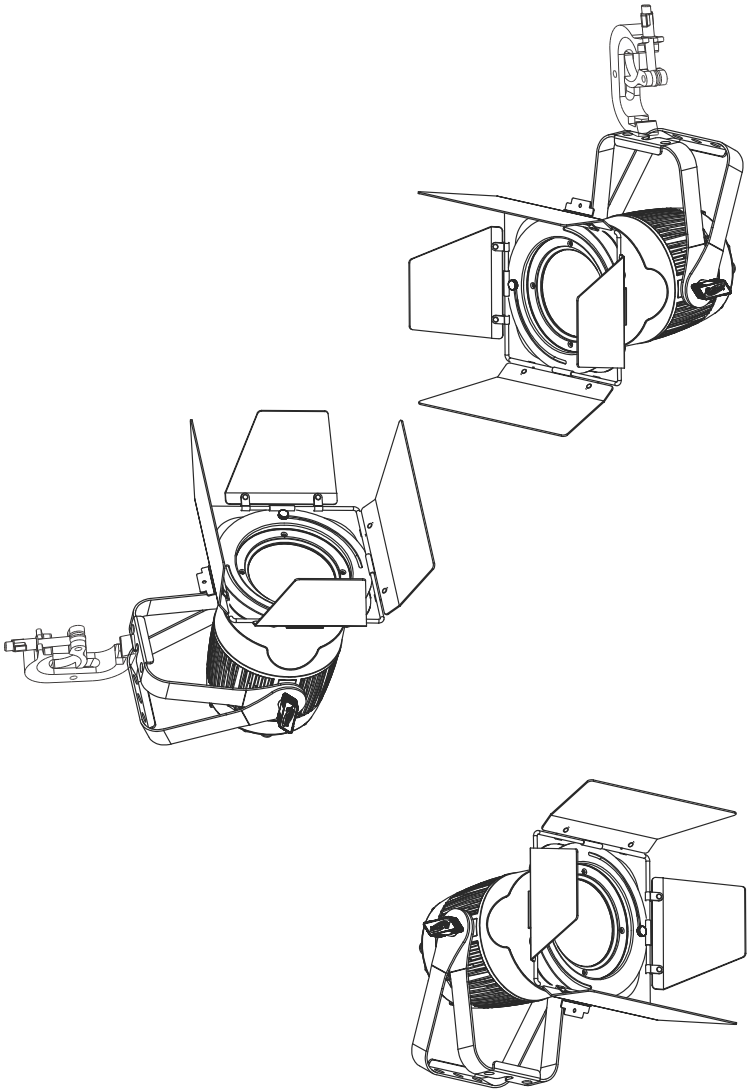

SAFETY CABLE

ALWAYS ATTACH A SAFETY CABLE TO THE FIXTURE WHENEVER INSTALLING IN A SUSPENDED ENVIRONMENT TO ENSURE THE FIXTURE WILL NOT DROP IF CLAMP FAILS.

POWER LINKING

Max number of **FUZE WASH Z60 IP™** units power linked together:

16 units @120V | 28 units @240V

USE CAUTION WHEN POWER LINKING OTHER FIXTURES TO THIS FIXTURE AS THE POWER CONSUMPTION OF OTHER LIGHTING FIXTURES WILL VARY!

SYSTEM MENU

The fixture comes with an easy to navigate system menu. The control panel (see image below) located on the front the fixture provides access to the main system menu and is where all necessary system adjustments are made to the fixture. During normal operation, pressing **MODE** button once will access the fixture's main menu. Once in the main menu you can navigate through the different functions and access the sub-menus with the **UP** and **DOWN** buttons. Once you reach a field that requires adjusting, press the **ENTER** button to activate that field and use the **UP** and **DOWN** buttons to adjust the field. Pressing the **ENTER** button once more will confirm your setting. You may exit the main menu at any time without making any adjustments by pressing the **MODE**/**ESC** button.

LCD CONTROL PANEL LOCKOUT FEATURE

When the **Key Lock** menu (**Function | LCD. Set | Key Lock**) is set to **ON** (default setting); the LCD control panel display will turn OFF and become LOCKED after non-use. To UNLOCK, press the **ENTER** button followed by pressing and holding the **MODE** button until the LCD control panel display is UNLOCKED.

When the **Key Lock** menu is set to **ON1** and is LOCKED, follow these steps to UNLOCK:

1. When locked, the display will show: **LOCKED*****
2. Press **UP**, then the display will change to: **LOCKED**** (one * disappears)
3. Press **DOWN**, then the display will change to: **LOCKED***** (two * disappear)
4. Press **UP**, then the display will change to: **LOCKED**** (three * disappear)
5. Press **DOWN**, then the display will change to: **LOCKED*** (four * disappear)
6. Press **ENTER**, then the display will become unlocked.

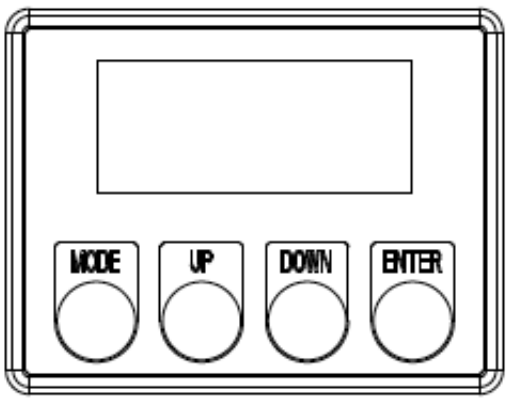

FUZE PAR Z60 IP

INFORMATION DISPLAYED DURING INITIAL POWER ON

When the fixture is initially powered ON, the display shows the following information:

Update Wait... → **ZOOM Reset...** → **ELATION Vx.xx** → **Fuze Par Z60 IP**

ELATION© FUZE PAR Z60 IP™ SYSTEM MENU			
Supports Software Versions: ≥ 1.02			
MENU	**OPTIONS / VALUES (Default Settings in BOLD)**		**DESCRIPTION**
Set ADDR	**001** ~ XXX		DMX Address Setting
UserMode	**CH:04 RGBW**, CH:04 HSI, CH:05 HSI+, CH:06 RGBW, CH:07 sRGBWI, CH:07 RGBW, CH:08 RGBW, CH:09 RGBW, CH:10 16Bit, CH:10 HSI, CH:12 sRGBWI, CH:13 RGBW		Set DMX Channel
Function	DimCurve	**Standard**, Stage, TV, Architectur, Theatre	Set Dimmer Curve Mode
	No DMX	**Hold** / Blackout / Program	Function If NO DMX Detected
	ZOOM	000 - 255	
	AUTO RUN	FQN: **01**-99	Set the number of times each internal macro will repeat before moving to the next macro.
	01. STATIC CL: R	**R**/G/B/RG/GB/RB/RGB/BLAC F **00**	Set Static Color Program Macro
	02. CHANG SP01 F00	SP**01**-99 F**00**-99	Set Color Change Program Macro
	03. FADE SP01 F00	SP**01**-99 F**00**-99	Set Color Fade Program Macro
	Macros	**00**-63	Select Color Macro
	LCD. Set	Backligh **05**-60	LCD Backlight Shut Off Time (mins)
		Key Lock **OFF** / ON / ON1	Control Front Panel Buttons Key Lock
		DispFlash **ON** / OFF	Display flashes when NO DMX
	DFSET	**OFF** / ON	Reset Fixture Back Factory Defaults
	TEMP	**Fahren** / Celsius	Temperature Switch Between C°/ F°
Info	TimeInfo | Current	XXXX (Hours)	Fixture Run Time From Power ON
	TimeInfo | Total Time	XXXX (Hours)	Fixture Total Run Time
	TimeInfo | Last Clear	XXXX (Hours)	Clear Fixture Last Run Time
	TimeInfo | Timer PIN	PIN= **050**	Enter PIN to Access Clear Last. Menu
	TempInfo	XXX **F°** / C°	Temperature in Fixture Head
	ModelInf	Fuze Par Z60 IP	Display Fixture Model Name
	Software Version	1U V102	Software Versions **(greater than or equal to)**
		2U V102	

ELATION© FUZE PAR Z60 IP™ SYSTEM MENU			
Supports Software Versions: ≥ 1.02			
MENU	**OPTIONS / VALUES (Default Settings in BOLD)**		**DESCRIPTION**
ZoomRset	Reset. M		Reset of Zoom Motor
Slave	Slave		Set Slave Mode
Manual	ManCtrl ZOOM	**000** - 255	Manual Control
	ManCtrl Dimmer	000 - **255**	
	ManCtrl Red	000 - **255**	
	ManCtrl Green	000 - **255**	
	ManCtrl Blue	000 - **255**	
	ManCtrl White	000 - **255**	
	ManCtrl Strobe	000 - **255**	

Function - DimCurve

Select desired DIMMER MODE (**Standard**, Stage, TV, Architectural, Theatre).

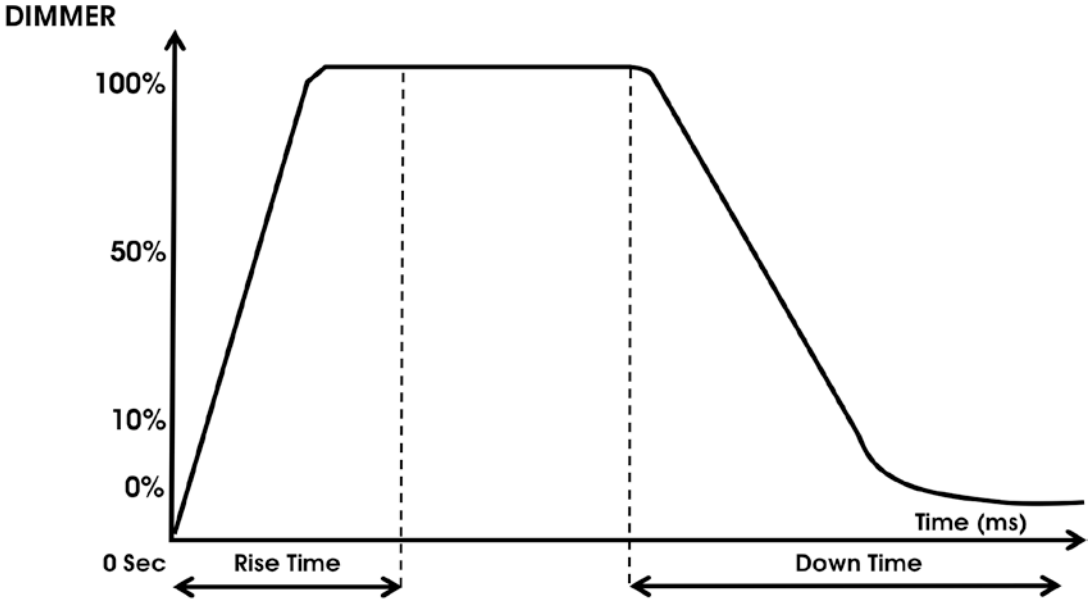

Dimming Curve Ramp Effect	0 sec Fade Time		1 sec Fade Time	
	Rise Time (ms)	Down Time (ms)	Rise Time (ms)	Down Time (ms)
Standard (default)	0	0	0	0
Stage	780	1100	1540	1660
TV	1180	1520	1860	1940
Architectural	1380	1730	2040	2120
Theatre	1580	1940	2230	2280

DMX CHANNEL FUNCTIONS AND VALUES

ELATION© FUZE PAR Z60 IP™ DMX Channel Values / Functions Version (13 DMX Channels)													
Supports Software Versions: ≥ 1.02													
Features are subject to change without any prior written notice.													
MODE / CHANNEL												**VALUE**	**FUNCTION**
CH:04 RGBW	**CH:04 HSI**	**CH:05 HSI**	**CH:06 RGBW**	**CH:07 sRGBWI**	**CH:07 RGBW**	**CH:08 RGBW**	**CH:09 RGBW**	**CH:10 16Bit**	**CH:10 HSI**	**CH:12 sRGBI**	**CH:13 RGBW**		
1			1	2	1	1	1	1		2	1		RED
												0-255	0 to 100%
								2					RED FINE
												0-255	RED FINE Adjustment
2			2	3	2	2	2	3		3	2		GREEN
												0-255	0 to 100%
								4					GREEN FINE
												0-255	GREEN FINE Adjustment
3			3	4	3	3	3	5		4	3		BLUE
												0-255	0 to 100%
								6					BLUE FINE
												0-255	BLUE FINE Adjustment
4			4	5	4	4	4	7		5	4		WHITE
												0-255	0 to 100%
								8					WHITE FINE
												0-255	WHITE FINE Adjustment
													SHUTTER / STROBE
												0-31	LED OFF
												32-63	LED ON
												64-95	Strobe Effect SLOW to FAST
				1		5	5		1	1	6	96-127	LED ON
												128-159	Pulse Effect in Sequences
												160-191	LED ON
												192-223	Random Strobe Effect SLOW to FAST
												224-255	LED ON
	1	1							2				HUE
												0-255	0-100%
	2	2							3				SATURATION
												0-255	0-100%
	3	3		6					4	6			INTENSITY
												0-255	0-100%

ZOOM IS SET TO DEFAULT MIN BEAM ANGLE WHEN IN CH:04 RGBW DMX MODE

ELATION© FUZE PAR Z60 IP™ DMX Channel Values / Functions Version (13 DMX Channels)													
Supports Software Versions: ≥ 1.02													
Features are subject to change without any prior written notice.													
MODE / CHANNEL												**VALUE**	**FUNCTION**
CH:04 RGBW	**CH:04 HSI**	**CH:05 HSI**	**CH:06 RGBW**	**CH:07 sRGBWI**	**CH:07 RGBW**	**CH:08 RGBW**	**CH:09 RGBW**	**CH:10 16Bit**	**CH:10 HSI**	**CH:12 sRGBI**	**CH:13 RGBW**		
													COLOR PRESETS
												0	OFF
												1-4	COLOR PRESET 01
												5-8	COLOR PRESET 02
												9-12	COLOR PRESET 03
												13-16	COLOR PRESET 04
												17-20	COLOR PRESET 05
												21-24	COLOR PRESET 06
												25-28	COLOR PRESET 07
												29-32	COLOR PRESET 08
												33-36	COLOR PRESET 09
												37-40	COLOR PRESET 10
												41-44	COLOR PRESET 11
												45-48	COLOR PRESET 12
												49-52	COLOR PRESET 13
												53-56	COLOR PRESET 14
									5	7	5	57-60	COLOR PRESET 15
												61-64	COLOR PRESET 16
												65-68	COLOR PRESET 17
												69-72	COLOR PRESET 18
												73-76	COLOR PRESET 19
												77-80	COLOR PRESET 20
												81-84	COLOR PRESET 21
												85-88	COLOR PRESET 22
												89-92	COLOR PRESET 23
												93-96	COLOR PRESET 24
												97-100	COLOR PRESET 25
												101-104	COLOR PRESET 26
												105-108	COLOR PRESET 27
												109-112	COLOR PRESET 28
												113-116	COLOR PRESET 29
												117-120	COLOR PRESET 30
												121-124	COLOR PRESET 31
												125-128	COLOR PRESET 32

ELATION© FUZE PAR Z60 IP™ DMX Channel Values / Functions Version (13 DMX Channels)													
Supports Software Versions: ≥ 1.02													
Features are subject to change without any prior written notice.													
MODE / CHANNEL												**VALUE**	**FUNCTION**
CH:04 RGBW	**CH:04 HSI**	**CH:05 HSI**	**CH:06 RGBW**	**CH:07 sRGBWI**	**CH:07 RGBW**	**CH:08 RGBW**	**CH:09 RGBW**	**CH:10 16Bit**	**CH:10 HSI**	**CH:12 sRGBI**	**CH:13 RGBW**		
													COLOR PRESETS [continued]
												129-132	COLOR PRESET 33
												133-136	COLOR PRESET 34
												137-140	COLOR PRESET 35
												141-144	COLOR PRESET 36
												145-148	COLOR PRESET 37
												149-152	COLOR PRESET 38
												153-156	COLOR PRESET 39
												157-160	COLOR PRESET 40
												161-164	COLOR PRESET 41
												165-168	COLOR PRESET 42
												169-172	COLOR PRESET 43
												173-176	COLOR PRESET 44
												177-180	COLOR PRESET 45
												181-184	COLOR PRESET 46
												185-188	COLOR PRESET 47
									5	7	5	189-192	COLOR PRESET 48
												193-196	COLOR PRESET 49
												197-200	COLOR PRESET 50
												201-204	COLOR PRESET 51
												205-208	COLOR PRESET 52
												209-212	COLOR PRESET 53
												213-216	COLOR PRESET 54
												217-220	COLOR PRESET 55
												221-224	COLOR PRESET 56
												225-228	COLOR PRESET 57
												229-232	COLOR PRESET 58
												233-236	COLOR PRESET 59
												237-240	COLOR PRESET 60
												241-244	COLOR PRESET 61
												245-248	COLOR PRESET 62
												249-252	COLOR PRESET 63
												253-255	COLOR PRESET 64

ELATION© FUZE PAR Z60 IP™ DMX Channel Values / Functions Version (13 DMX Channels)													
Supports Software Versions: ≥ 1.02													
Features are subject to change without any prior written notice.													
MODE / CHANNEL												**VALUE**	**FUNCTION**
CH:04 RGBW	**CH:04 HSI**	**CH:05 HSI**	**CH:06 RGBW**	**CH:07 sRGBWI**	**CH:07 RGBW**	**CH:08 RGBW**	**CH:09 RGBW**	**CH:10 16Bit**	**CH:10 HSI**	**CH:12 sRGBI**	**CH:13 RGBW**		
			5		5	6	6				7		DIMMER INTENSITY
												0-255	Dimmer 0 to 100%
					6	7	7				8		DIMMER INTENSITY FINE
												0-255	Dimmer FINE Adjustment
	4	4	6	7	7	8	8	9	6	8	9		ZOOM
												0-255	ZOOM 0% (5 Degrees) to 100% (50 Degrees)
								10					ZOOM FINE
												0-255	ZOOM FINE Adjustment
									7	9	10		PROGRAM MACROS
												0	NO FUNCTION
												1-20	COLOR MACRO 01
												21-40	COLOR MACRO 02
												41-60	COLOR MACRO 03
												61-80	COLOR MACRO 04
												81-100	COLOR MACRO 05
												101-120	COLOR MACRO 06
												121-140	COLOR MACRO 07
												141-160	COLOR MACRO 08
												161-180	COLOR MACRO 09
												181-200	COLOR MACRO 10
												201-230	COLOR MACRO 11
												231-240	COLOR MACRO 12
												241-250	COLOR MACRO 13
												251-255	GRADIENT COLOR MACRO
									8	10	11		PROGRAM MACRO SPEED
												0-125	Counter-Clockwise Movement FAST to SLOW
												126-130	STOP
												131-255	Clockwise Movement SLOW to FAST
									9	11	12		PROGRAM MACRO FADE
												0-255	0-100%
		5					9		10	12	13		DIMMING CURVE MODES
												0-20	STANDARD
												21-40	STAGE
												41-60	TV
												61-80	ARCHITECTURAL
												81-100	THEATRE
												101-255	Default to Unit Setting

CLEANING AND MAINTENANCE

C A U T I O N

Disconnect power before cleaning or maintenance.

CLEANING

Frequent cleaning is recommended to insure proper function, optimized light output, and an extended life. The frequency of cleaning depends on the environment in which the fixture operates: damp, smoky or particularly dirty environments can cause greater accumulation of dirt on the fixture's optics.

- Clean the external lens surface at least every 20 days with a soft cloth to avoid dirt/debris accumulation. NEVER use alcohol, solvents, or ammonia based cleaners.

MAINTENANCE

Regular inspections are recommended to insure proper function and extended life. There are no user serviceable parts inside this fixture, please refer all other service issues to an authorized Elation service technician. Should you need any spare parts, please order genuine parts from your local Elation dealer.

Please refer to the following points during routine inspections:

- A detailed electric check by an approved electrical engineer every three months, to make sure the circuit contacts are in good condition and prevent overheating.
- Be sure all screws and fasteners are securely tightened at all times. Lose screws may fall out during normal operation resulting in damage or injury as larger parts could fall.
- Check for any deformations on the housing, color lenses, rigging hardware and rigging points (ceiling, suspension, trussing). Deformations in the housing could allow for dust to enter into the fixture. Damaged rigging points or unsecured rigging could cause the fixture to fall and seriously injure a person(s).
- Electric power supply cables must not show any damage, material fatigue or sediments. Never remove the ground prong from the power cable.

TECHNICAL SPECIFICATIONS

SOURCE

60W RGBW COB LEDs

100,000 Hour Average LED Life*

*May vary depending on several factors including but not limited to:
Environmental Conditions, Power/Voltage, Usage Patterns (On-Off Cycling), Control, and Dimming.

COLOR

RGBW

EFFECTS

RGBW Color Mixing
Motorized Zoom
Electronic Strobe, Dimming and Variable Dimming Curves
64 Color Presets and 14 Unique Color Macros

CONTROL / CONNECTIONS

12 DMX Channel Modes (13 Total Channels)
4 Touch Button Control Panel and LCD Menu Display
RDM (Remote Device Management)
IP rated 5pin DMX and power In/Out

SIZE / WEIGHT

Length: 10.0" (253mm)
Width: 9.9" (252mm)
Vertical Height: 11.1" (282mm)
Weight: 10 lbs. (4.5 kg)

ELECTRICAL / THERMAL

AC 100-240V - 50/60Hz
78W Max Power Consumption
5F to 113°F (-15°C to 45°C)

APPROVALS / RATINGS

CE | IP65

C ETL US
Intertek
4010765

Please Note: Specifications and improvements in the design of this unit and this manual are subject to change without any prior written notice.

DIMENSIONAL DRAWINGS

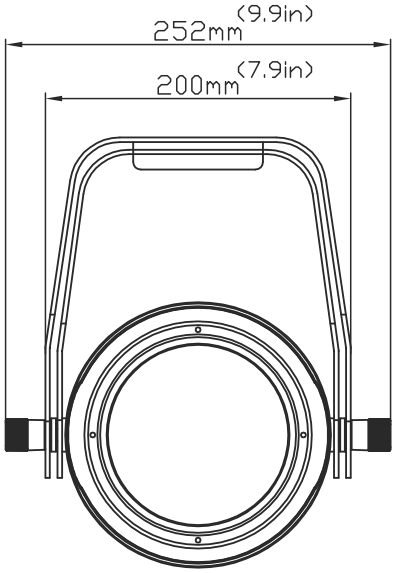

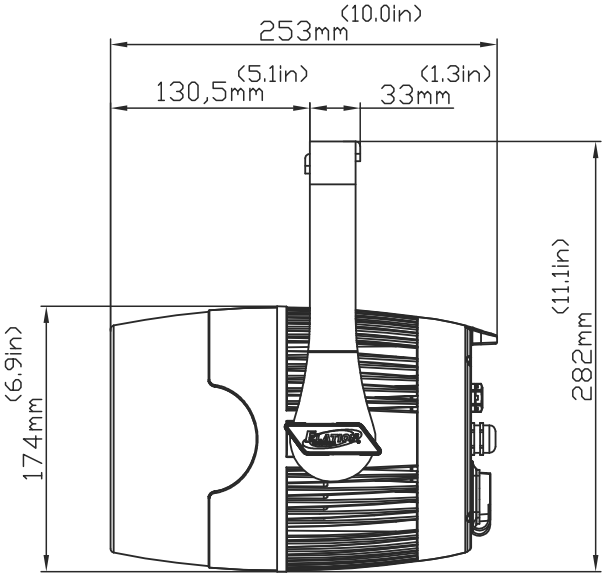

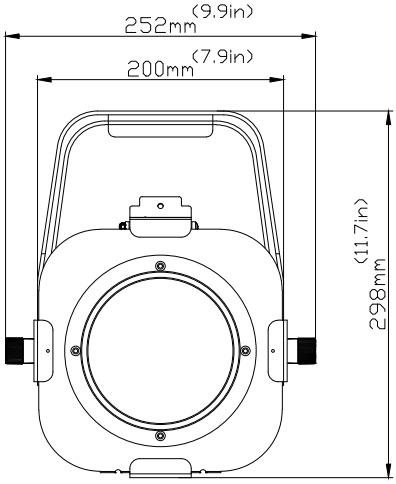

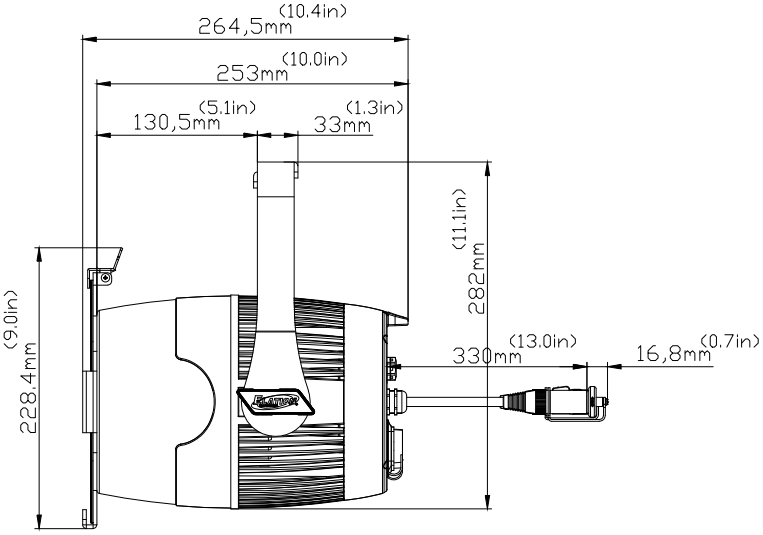

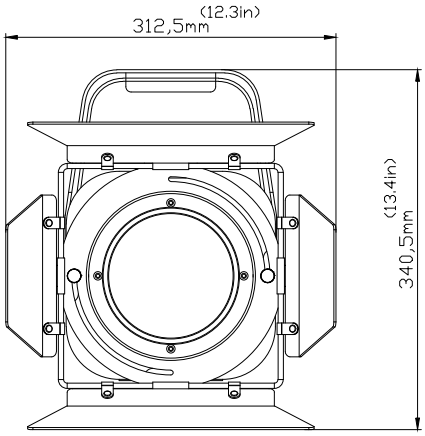

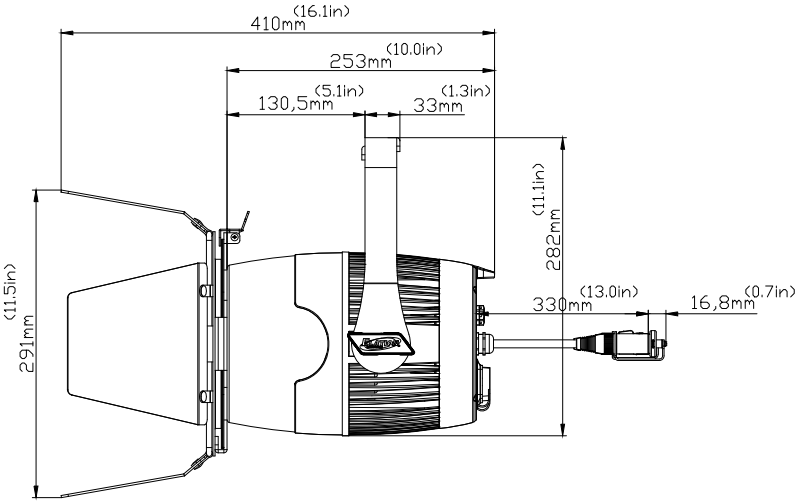

Please Note: Specifications and improvements in the design of this unit and this manual are subject to change without any prior written notice.

OPTIONAL ACCESSORIES

ORDER CODE	ITEM
NARROW CLAMP	PRO 2" Wrap Around Clamp
SCABLE60	24" (610mm) 60 lbs. (27 kg) Rated Safety Cable
NEU088	3 ft. (1m) **Twist Locking** Power Cable
	Additional Cable Lengths Available

(page left blank)