Panasonic

55-inch Class 4K UHD LCD Display

TH-55EQ1U

Product specification (design and specification subject to change without notice)

■DISPLAY PANEL

Screen Size (Diagonal)	54.6-inch (1387 mm)
Panel type / Backlight	VA / Direct-LED
Aspect ratio	16:9
Effective Display Area (W x H)	47.6" x 26.7" (1209 x 680 mm)
Resolution (H x V)	3840 x 2160
Brightness	350 cd/m² (Typ)
Contrast Ratio	4000:1 (Typ)
Dynamic Contrast Ratio	50000:1
Max. Display Colors	Approx. 1.06 Billion
Response Time	8 ms (Typ) (G to G)
Viewing Angle (Horizontal / Vertical)	178°/ 178° (CR≧10)
Panel Life Time*1	Approx. 50000 hours (Typ)
Panel Surface Treatment	Anti-glare type (Haze 2%)

*1 When the panel lifetime is at 50% of the brightness under the condition of 25 degrees Celsius (+/- 2 degrees celsius).

■CONNECTION TERMINAL

HDMI IN	HDMI Type A Connector x 2	Linear PCM (Sampling frequency : 48 kHz/44.1 kHz/32 kHz) Compatible with HDCP 2.2
VIDEO (AV) IN	Audio/Video 4-pole mini jack (M3) x 1 Audio: Stereo mini jack (M3) x 1	Video: 1.0 Vp-p (75 Ω) 0.5 Vms
DVI-D IN	DVI-D 24-pin x 1	Compliance with DVI Revision 1.0 Compatible with HDCP 1.1
PC IN	Mini D-Sub 15-pin x 1 (Female)	Y/G : with sync 1.0 V [p-p] (75 Ω) : without sync 0.7 V [p-p] (75 Ω) P_B/C_B/B : without sync 0.7 V [p-p] (75 Ω) P_R/C_R/R : without sync 0.7 V [p-p] (75 Ω) HD/VD : 1.0 - 5.0 V [p-p] (high impedance)
SERIAL IN	D-sub 9pin x 1, RS-232C Compatible	
Remote Control Through IN/OUT	Stereo Mini Jack (M3) x 1 / x 1	
AUDIO IN	Stereo Mini Jack (M3) x 1 (Shared with AV IN, PC IN and DVI-D IN)	0.5 V [rms]
AUDIO OUT	Stereo Mini Jack (M3) x 1 Variable (- ∞ - 0 dB) (1 kHz 0 dB Input,10 kΩ Load)	0.5 V [rms]
LAN	RJ45 x 1 compatible with PJLink™ RJ45 10BASE-T/100BASE-TX/1000BASE-T	
USB	USB Type A Connector x 1, DC 5 V/2A (USB 3.0 is supported)	

■AUDIO

Built in Speaker	20W (10W+10W)

■ELECTRICAL

Power Requirements	AC 110 - 127 V 50 Hz / 60 Hz
Power Consumption	195 W
On Mode Average Power Consumption*	141 W
Power Off Condition	Approx. 0.3 W
Stand-by Condition	Approx. 0.5 W
Apparent power	203 VA

*Based on IEC 62087 Ed.2 measurement method

■MECHANICAL

Dimension (W x H x D)	48.9" x 28.1" x 2.5" (1240 x 712 x 62 mm)
Weight	Approx. 37.5 lbs (17 kg)
Bezel Color	Black
Bezel Width	T/R/L 0.6" (12.9 mm) B 0.6" (14.7 mm)
Carton Dimensions (W x H x D)	53.8" x 34.1" x 7.3" (1365 x 864 x 185 mm)
Gross Weight	Approx. 48.5 lbs (22 kg)
Cabinet Material	Front: Plastic / Back: Plastic
Pitch for Wall-Hanging	VESA Compliant 15.8" x 7.9" (400 x 200 mm) (Installed by: M6 screws / Screw hole depth 0.4" (10 mm))

■INSTALLATION

Orientation	Landscape / Portrait
Tilting Angle	Landscape : 0-20 degrees forward / backward Portrait : 0-20 degrees forward / backward

*Please contact your sales representative with regard to the tilt angle before installation.
*When you install the product upright, be sure to make the power lamp of the main body come to the upper side.

■ENVIRONMENTAL

Operating Environment	Temperature	: 32°F to 104°F (0°C to 40°C)*1 : 32°F to 95°F (0°C to 35°C)*2
	Humidity	: 20% to 80% (No condensation)
Storage Environment	Temperature	: -4°F to 140°F (-20°C to 60°C)
	Humidity	: 20% to 80% (No condensation)

*1 : for up to 4593 ft (1400 m) altitude *2 : for between 4593 ft (1400 m) and 9186 ft (2800 m) altitude
・Depending on the temperature or humidity conditions, uneven brightness may be observed. This is not a malfunction.
・This unevenness will disappear while applying current continuously. If not, consult the distributor.

UPC Code	885170338425

© Panasonic Corporation 2019

MAIN FEATURE

USB Media Player	Yes
Failover/Failback	Yes
Data Cloning	Yes
Digital Zoom	Yes
Multi display settings	Yes
Power ON Screen Delay	Yes
1:1 Pixel mode	Yes
Screen Saver	Yes
Power Management	HDMI/PC/DVI-D
Power save	Yes
Button Lock	Yes
Controller user level	Yes
Input search / Input detection	Yes
6-segment color management	Yes
Picture mode	Yes
Dynamic contrast	Yes
Color enhancement	Yes
Refine enhancer	Yes
Gradation smoother	Yes
Dynamic backlight control	Yes
Set up timer	Yes
AMX D.D.	Yes
Crestron Connected™	Yes
WEB Browser control	Yes
PJLink	Yes
Image settings	Yes
HDMI CEC Compatible	Yes
Memory Viewer	Yes
Playlist Editing Function	Yes
Operating Time*1	18 / day

*1 In case of running for a long time, the moving image is recommended to be displayed. If you display a still picture for an extended period, the image retention might remain on the screen. However, image retention can gradually disappear by displaying movie images.

STANDARD (CERTIFICATIONS)

SAFETY REGULATIONS	UL60950-1, 2nd Edition,2014-10-14 CSA C22.2 No. 60950-1-07, 2nd Edition, 2014-10 Mexico: NOM-019-SCFI-1998
RADIATION REGULATIONS	FCC 47 CFR, Part 15, Subpart B Class A ANSI C63.4-2014 ICES-003

REMOTE CONTROL TRANSMITTER

Power Requirements	DC 3 V (2 x AAA Size batteries)
Operating distance	Approx. 23 ft (7 m)*
Weight	Approx. 2.2 oz (63 g) including batteries
Dimemsions (W x H x D)	1.9" x 5.3" x 0.8" (48 x 134 x 20 mm)

*When operated directly in front of receptor.

INCLUDED ACCESSORIES

- Remote Control - Batteries (AAA size) x 2
- AC cord (approx. 70.9" (1.8 m)) - 4-pole mini plug conversion cable
- Clamper x 3 - USB Memory cover x 1
- CD-ROM / User Manual - Operating Instruction Book

COMPATIBLE SOFTWARE

Multi Monitoring & Control Software	Ver.2.1 or later
CMS Content Management Software	Ver 3.0 or later
Video Wall Manager	Ver 1.9 or later

OPTIONAL ACCESSORIES

Pedestal	TY - ST43PE8
Early Warning Software* Basic license / 3-year license	ET-SWA100 / 105series (Depending on the license type, the symbol at the end of the part number is different.)

* Multi-Monitoring Control Software Ver 2.1 or later is required.

DIMENSIONS

Cautions: This drawing is not a scale
Units : inches (mm)

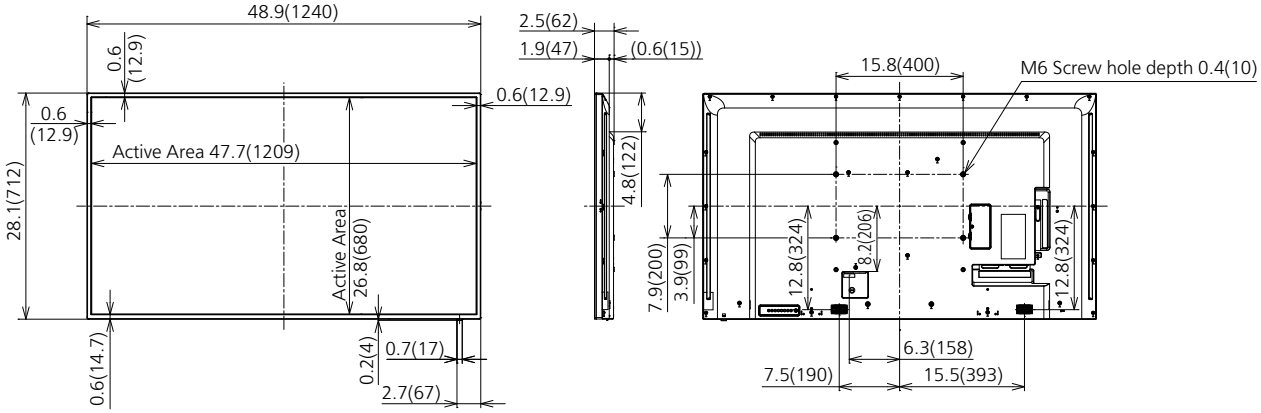

CONNECTION TERMINAL

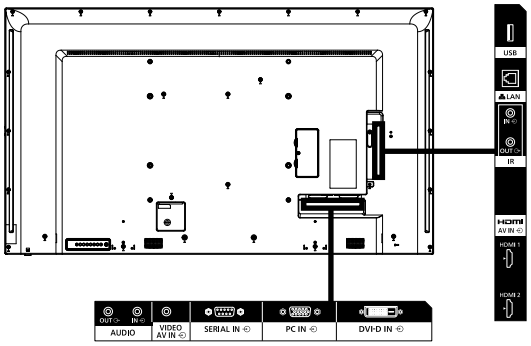

* Specifications and appearance are subject to change without notice.

List of correspondence signals

The picture signal which can indicate this machine is as it is the following table.

● Specific HDMI signals inside the plug and play compatible signal table are as it follows.
1 : 4K/60p, 2 : 4K/30p, 3 : 2K

Correspondence signal	Resolution (dot)	Scan rate		Dot clock rate (MHz)	Format*2	Plug and play compatible signal*4			
		Horizontal (kHz)	Vertical (Hz)			HDMI			DVI-D/PC
						1	2	3	
NTSC/NTSC4.43/ PAL-M/PAL60	720 x 480i	15.73	59.94	-	V	-	-	-	-
PAL/PAL-N/SECAM	720 x 576i	15.63	50.00	-	V	-	-	-	-
480/60i	720 x 480i	15.73	59.94	13.50	Y	-	-	-	-
576/50i	720 x 576i	15.63	50.00	13.50	Y	-	-	-	-
480/60i	720 (1440) x 480i*1	15.73	59.94	27.00	D/H	✓	✓	✓	-
576/50i	720 (1440) x 576i*1	15.63	50.00	27.00	D/H	✓	✓	✓	-
480/60p	720 x 483	31.47	59.94	27.00	Y/D/H	✓	✓	✓	-
576/50p	720 x 576	31.25	50.00	27.00	Y/D/H	✓	✓	✓	-
720/60p	1280 x 720	45.00	60.00	74.25	Y/D/H	✓	✓	✓	-
720/50p	1280 x 720	37.50	50.00	74.25	Y/D/H	✓	✓	✓	-
1080/60i	1920 x 1080i	33.75	60.00	74.25	Y/D/H	✓	✓	✓	-
1080/50i	1920 x 1080i	28.13	50.00	74.25	Y/D/H	✓	✓	✓	-
1080/24p	1920 x 1080	27.00	24.00	74.25	Y/D/H	✓	✓	✓	-
1080/24PsF	1920 x 1080i	27.00	48.00	74.25	Y/D/H	-	-	-	-
1080/25p	1920 x 1080	28.13	25.00	74.25	Y/D/H	✓	✓	✓	-
1080/30p	1920 x 1080	33.75	30.00	74.25	Y/D/H	✓	✓	✓	-
1080/60p	1920 x 1080	67.50	60.00	148.50	Y/D/H	✓	✓	✓	-
1080/50p	1920 x 1080	56.25	50.00	148.50	Y/D/H	✓	✓	✓	-
2K/24p	2048 x 1080	27.00	24.00	74.25	D/H	-	-	-	-
2K/25p	2048 x 1080	28.13	25.00	74.25	D/H	-	-	-	-
2K/30p	2048 x 1080	33.75	30.00	74.25	D/H	-	-	-	-
2K/48p	2048 x 1080	54.00	48.00	148.50	D/H	-	-	-	-
2K/60p	2048 x 1080	67.50	60.00	148.50	D/H	-	-	-	-
2K/50p	2048 x 1080	56.25	50.00	148.50	D/H	-	-	-	-
3840 x 2160/24p	3840 x 2160	54.00	24.00	297.00	H	✓	✓	-	-
3840 x 2160/25p	3840 x 2160	56.25	25.00	297.00	H	✓	✓	-	-
3840 x 2160/30p	3840 x 2160	67.50	30.00	297.00	H	✓	✓	-	-
3840 x 2160/60p	3840 x 2160	135.00	60.00	594.00	H	✓	-	-	-
3840 x 2160/50p	3840 x 2160	112.50	50.00	594.00	H	✓	-	-	-
4096 x 2160/24p	4096 x 2160	54.00	24.00	297.00	H	✓	✓	-	-
4096 x 2160/25p	4096 x 2160	56.25	25.00	297.00	H	✓	✓	-	-
4096 x 2160/30p	4096 x 2160	67.50	30.00	297.00	H	✓	✓	-	-
4096 x 2160/60p	4096 x 2160	135.00	60.00	594.00	H	✓	-	-	-
4096 x 2160/50p	4096 x 2160	112.50	50.00	594.00	H	✓	-	-	-
640 x 400/70	640 x 400	31.47	70.09	25.18	R/D/H	-	-	-	-
640 x 400/85	640 x 400	37.86	85.08	31.50	R/D/H	-	-	-	-
640 x 480/60	640 x 480	31.47	59.94	25.18	R/D/H	✓	✓	✓	✓
640 x 480/67	640 x 480	35.00	66.67	30.24	R/D/H	-	-	-	-
640 x 480/73	640 x 480	37.86	72.81	31.50	R/D/H	-	-	-	-
640 x 480/75	640 x 480	37.50	75.00	31.50	R/D/H	-	-	-	-
640 x 480/85	640 x 480	43.27	85.01	36.00	R/D/H	-	-	-	-
800 x 600/56	800 x 600	35.16	56.25	36.00	R/D/H	-	-	-	-
800 x 600/60	800 x 600	37.88	60.32	40.00	R/D/H	✓	✓	✓	✓
800 x 600/72	800 x 600	48.08	72.19	50.00	R/D/H	-	-	-	-
800 x 600/75	800 x 600	46.88	75.00	49.50	R/D/H	-	-	-	-
800 x 600/85	800 x 600	53.67	85.06	56.25	R/D/H	-	-	-	-
832 x 624/75	832 x 624	49.72	74.55	57.28	R/D/H	-	-	-	-
852 x 480/60	852 x 480	31.47	59.94	34.24	D/H	-	-	-	-
1024 x 768/50	1024 x 768	39.55	50.00	51.89	D/H	-	-	-	-
1024 x 768/60	1024 x 768	48.36	60.00	65.00	R/D/H	✓	✓	✓	✓
1024 x 768/70	1024 x 768	56.48	70.07	75.00	R/D/H	-	-	-	-
1024 x 768/75	1024 x 768	60.02	75.03	78.75	R/D/H	-	-	-	-
1024 x 768/82	1024 x 768	65.55	81.63	86.00	R/D/H	-	-	-	-
1024 x 768/85	1024 x 768	68.68	85.00	94.50	R/D/H	-	-	-	-
1066 x 600/60	1066 x 600	37.64	59.94	53.00	D/H	-	-	-	-
1152 x 864/60	1152 x 864	53.70	60.00	81.62	D/H	-	-	-	✓
1152 x 864/70	1152 x 864	63.99	70.02	94.20	R/D/H	-	-	-	-
1152 x 864/75	1152 x 864	67.50	75.00	108.00	R/D/H	-	-	-	-
1152 x 864/85	1152 x 864	77.09	85.00	119.65	R/D/H	-	-	-	-
1152 x 870/75	1152 x 870	68.68	75.06	100.00	R/D/H	-	-	-	-
1280 x 720/60	1280 x 720	44.76	60.00	74.48	R/D/H	-	-	-	✓
1280 x 768/50	1280 x 768	39.55	49.94	65.18	R/D/H	-	-	-	-
1280 x 768/60	1280 x 768	47.70	60.00	80.14	R/D/H	-	-	-	-
1280 x 768/60	1280 x 768	47.78	59.87	79.50	R/D/H	-	-	-	-
1280 x 800/50	1280 x 800	41.20	50.00	68.56	R/D/H	-	-	-	-
1280 x 800/60	1280 x 800	49.31	59.91	71.00	R/D/H	-	-	-	-
1280 x 800/60	1280 x 800	49.70	59.81	83.50	R/D/H	-	-	-	✓
1280 x 960/60	1280 x 960	60.00	60.00	108.00	R/D/H	-	-	-	-
1280 x 960/85	1280 x 960	85.94	85.00	148.50	R	-	-	-	-
1280 x 1024/60	1280 x 1024	63.98	60.02	108.00	R/D/H	✓	✓	✓	✓
1280 x 1024/75	1280 x 1024	79.98	75.02	135.00	R/D/H	-	-	-	-
1280 x 1024/85	1280 x 1024	91.15	85.02	157.50	R/D/H	-	-	-	-
1360 x 768/60	1360 x 768	47.71	60.02	85.50	D/H	-	-	-	-
1360 x 768/60	1360 x 768	47.70	60.00	84.72	D/H	-	-	-	-
1360 x 768/60	1360 x 768	47.72	59.80	84.75	D/H	-	-	-	-

© Panasonic Corporation 2019

Correspondence signal	Resolution (dot)	Scan rate		Dot clock rate (MHz)	Format*2	Plug and play compatible signal*4			
		Horizontal (kHz)	Vertical (Hz)			HDMI			DVI-D/PC
						1	2	3	
1366 x 768/50	1366 x 768	39.55	50.00	69.92	D/H	-	-	-	-
1366 x 768/60	1366 x 768	48.39	60.03	86.71	R/D/H	-	-	-	-
1366 x 768/60	1366 x 768	48.00	60.00	72.00	R/D/H	-	-	-	-
1366 x 768/50	1366 x 768	39.56	49.89	69.00	R/D/H	-	-	-	-
1366 x 768/60	1366 x 768	47.71	59.79	85.50	R/D/H	-	-	-	-
1400 x 1050/60	1400 x 1050	65.22	60.00	122.61	D/H	-	-	-	-
1400 x 1050/75	1400 x 1050	82.20	75.00	155.85	R/D/H	-	-	-	-
1440 x 900/60	1440 x 900	55.47	59.90	88.75	R/D/H	-	-	-	-
1440 x 900/60	1440 x 900	55.92	60.00	106.47	R/D/H	-	-	-	-
1600 x 900/50	1600 x 900	46.30	50.00	97.05	D/H	-	-	-	-
1600 x 900/60	1600 x 900	60.00	60.00	108.00	D/H	-	-	-	-
1600 x 900/60	1600 x 900	55.99	59.95	118.25	D/H	-	-	-	-
1600 x 900/60	1600 x 900	55.92	60.00	119.00	D/H	-	-	-	✓
1600 x 1200/60	1600 x 1200	75.00	60.00	162.00	R/D/H	-	-	-	-
1680 x 1050/60	1680 x 1050	65.29	59.95	146.25	R/D/H	-	-	-	-
1920 x 1080/60	1920 x 1080*3	66.59	59.93	138.50	R/D/H	-	-	-	-
1920 x 1080/60	1920 x 1080	67.50	60.00	148.50	R/D/H	✓	✓	✓	✓
1920 x 1200/60	1920 x 1200	74.04	59.95	154.00	R/D/H	✓	✓	✓	✓
1920 x 2160/60	1920 x 2160	133.29	59.99	277.25	H	-	-	-	-
1920 x 2160/60	1920 x 2160	135.00	60.00	297.00	H	-	-	-	-
2560 x 1440/60	2560 x 1440	88.79	59.95	241.50	H	-	✓	-	-
2560 x 1600/50	2560 x 1600	82.37	49.95	286.00	H	-	-	-	-
2560 x 1600/60	2560 x 1600	98.71	59.97	268.50	H	-	-	-	-
3840 x 1080/60	3840 x 1080	66.63	59.97	266.50	H	-	-	-	-

*1 : Pixel-Repetition signal (dot clock frequency 27.0 MHz) only
*2 : Alphabets inside the Format column represent as it follows.
V : CVS（AV IN）
R : D-sub RGB（PC IN）
Y : YCBCR/YPBPR（PC IN）
D : DVI-D（DVI-D IN）
H : HDMI（HDMI 1、HDMI 2）
*3 : Based on VESA CVT-RB (Reduced Blanking) standard
*4 : Signals with ● in the plug and play compatible signal column is the signal described in the EDID (extended display identification data) of the display. For the signals without ● in the plug and play compatible signal column, the resolution may not be selected on the computer even if the display is supporting it.

Note
● The signal format distinguished automatically will be sometimes indication different from an actual input signal.
● When 1080/30PsF signal and 1080/25PsF signal are input, they are processed as 1080/60i signal and 1080/50i signal, and then displayed.

© Panasonic Corporation 2019

Drawing of terminals

View from back

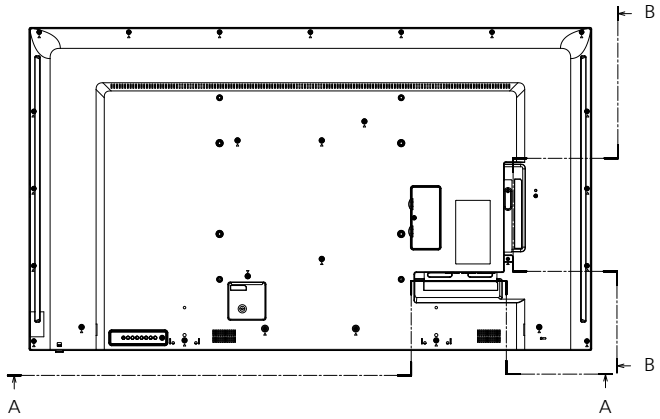

Magnified figure of terminal b

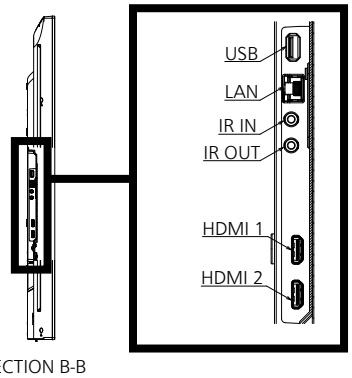

Magnified figure of terminal a

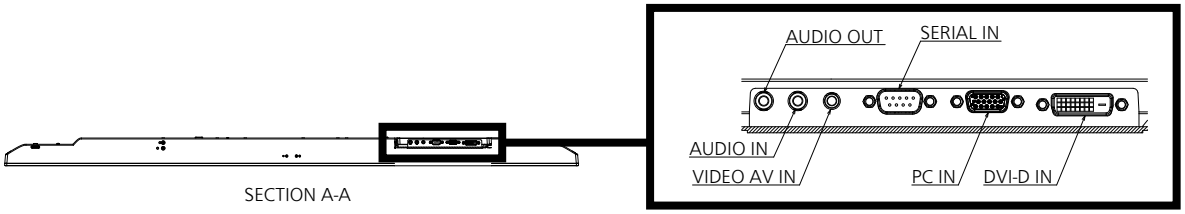

Sectional view of terminal a

(AUDIO OUT / AUDIO IN / VIDEO AV IN / SERIAL IN / PC IN / DVI-D IN)

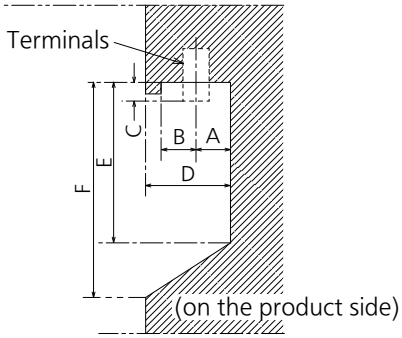

Terminal a
55EQ1U Terminal (Bottom)

Units : inches (mm)

	AUDIO IN/OUT VIDEO AV IN	SERIAL IN	PC IN	DVI-D IN
A	0.42 (10.6)	0.41 (10.4)	0.41 (10.3)	0.36 (9)
B	0.2 (5.2)	0.21 (5.4)	0.22 (5.5)	0.27 (6.8)
C	0.06 (1.7)	0.2 (5.3)	0.2 (5.3)	0.22 (5.6)
D	0.77 (19.6)			
E	2.3 (58.6)			
F	2.77 (70.6)			

Sectional view of terminal b

(USB / LAN / IR IN / IR OUT / HDMI 1 / HDMI 2)

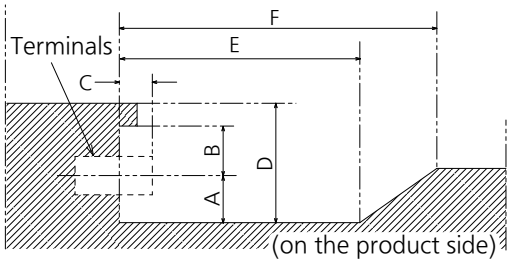

Terminal b
55EQ1U Terminal (Side)

Units : inches (mm)

	USB	LAN	IR IN/OUT	HDMI
A	0.37 (9.3)	0.32 (8)	0.39 (9.8)	0.26 (6.6)
B	0.22 (5.7)	0.27 (7)	0.2 (5.2)	0.33 (8.4)
C	-	-	0.06 (1.7)	-
D	0.74 (18.8)			
E	1.59 (40.4)			
F	1.81 (46.2)			

*Due to the construction of terminal, some types of connecting cable or USB memory device cannot be used.
Be sure to use connecting cable or USB memory device after confirmation in this drawing.

© Panasonic Corporation 2019