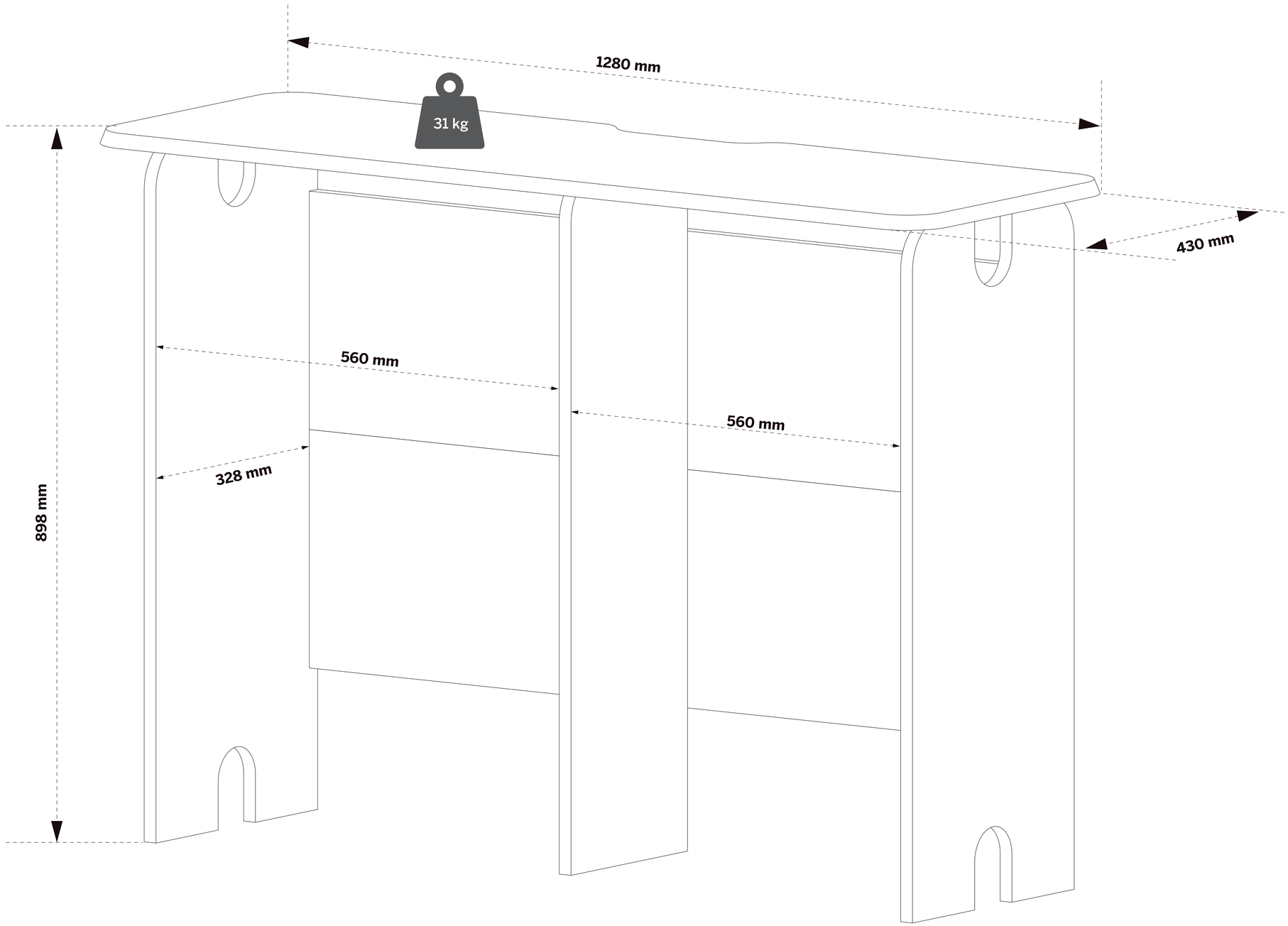

MIX STATION

GLORIOUS